Floor Cleanout

6000-XT

Cast iron floor cleanout with adjustable housing, nickel bronze frame, ductile iron underlayment nickel bronze veneer tile cover, and gasketed plastic plug.

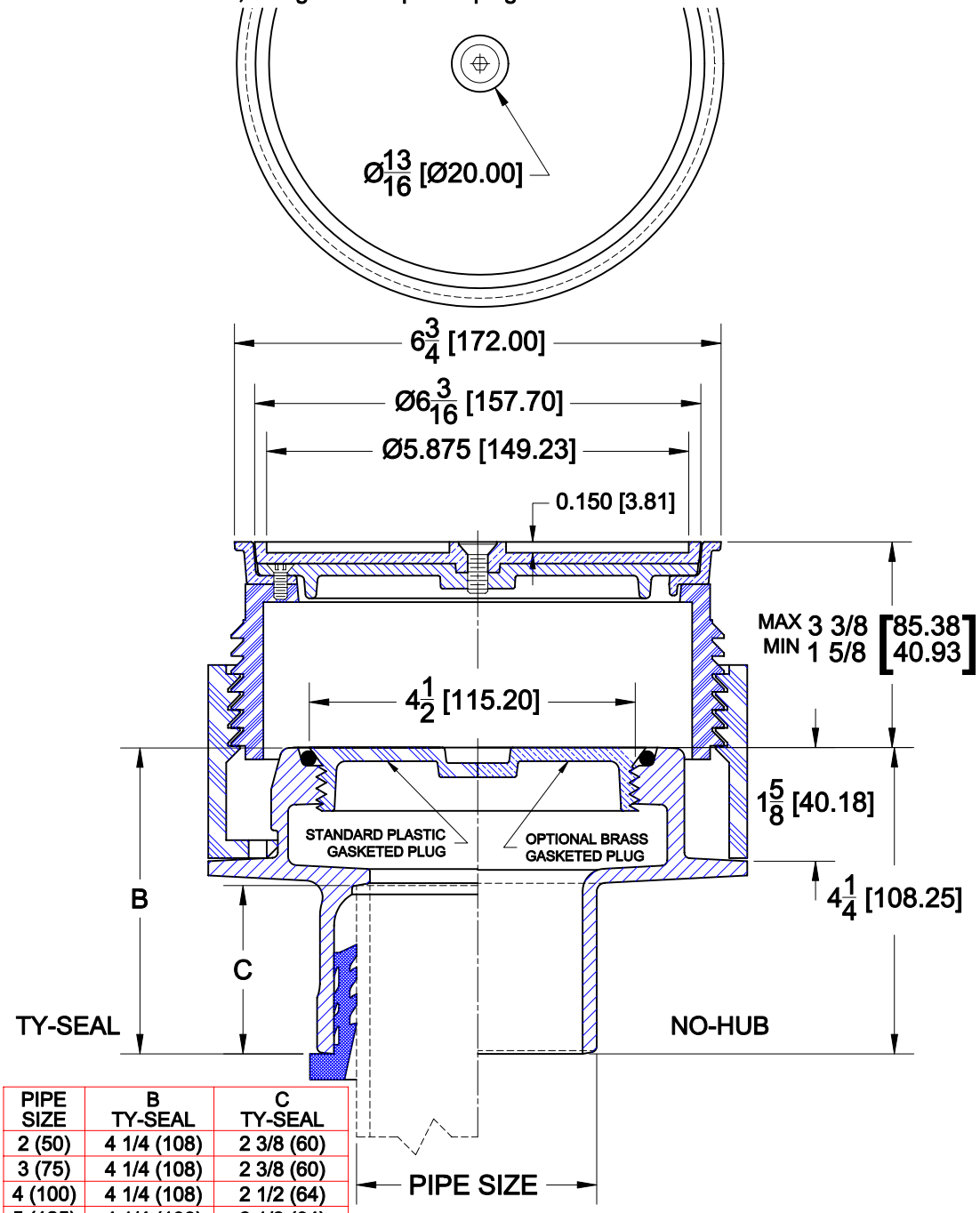

PIPE SIZE	B TY-SEAL	C TY-SEAL
2 (50)	4 1/4 (108)	2 3/8 (60)
3 (75)	4 1/4 (108)	2 3/8 (60)
4 (100)	4 1/4 (108)	2 1/2 (64)
5 (125)	4 1/4 (108)	2 1/2 (64)
6 (150)	4 3/8 (112)	2 5/8 (67)

Cat. No.	Pipe Size	Wt. Lbs.
☐ 6002-XT	2 (50)	16.0
☐ 6003-XT	3 (75)	17.0
☐ 6004-XT	4 (100)	18.0
☐ 6005-XT	5 (125)	19.0
☐ 6006-XT	6 (150)	21.0

OPTIONS

Suffix	Description
☐ 39	Galvanized Iron Parts
☐ 75	Bronze Taper Plug
☐ 118	Bronze Gasketed Plug
☐ 179	Security Screws

OUTLETS

☐ TY Ty-Seal ☐ NH No-Hub ☐ IC Inside Caulk ☐

AutoCad.dwg