# SINK CARRIER

WADE

## 640

SHEET 2 OF 3

CLINICAL SERVICE SINK CARRIER WITH STEEL UPRIGHTS,
CLOSET COUPLING, SUPPORT HARDWARE,
NEOPRENE BOWL GASKET & FINISH TRIM.

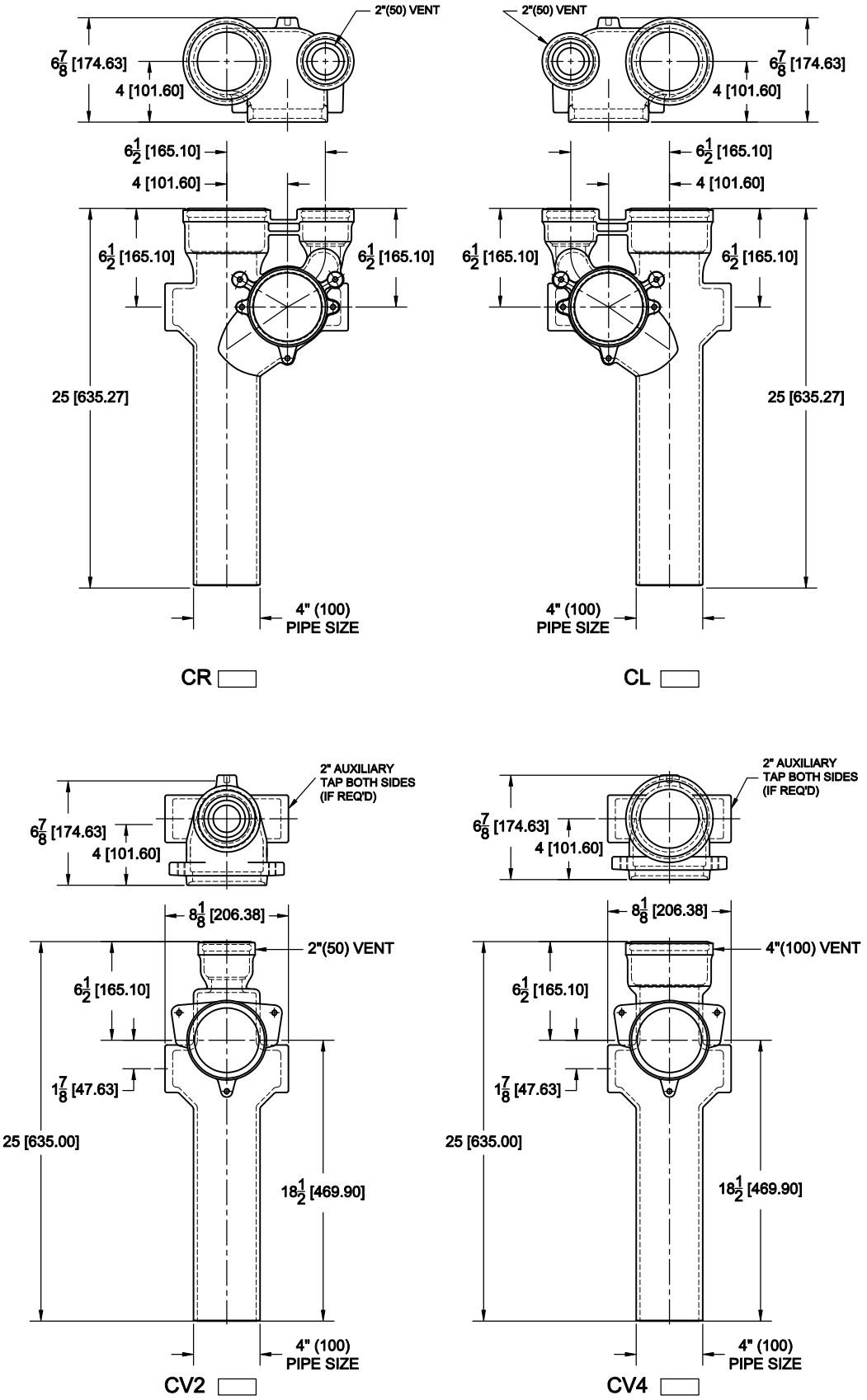


AutoCad.dwg

Approval Date

Customer Approval

Job Location

Job Name

Wade Division / Tyler Pipe Assumes No Responsibility For Superseded or Voided Data

Dimensional Data (Inches/mm) are Subject to Manufacturers Tolerance and Change Without Notice.