LAVATORY CARRIER

420

HANGER PLATE CARRIER WITH PIPE UPRIGHTS, WELDED BASE FEET & HARDWARE.

FIXTURE

Manufacturer Eljer

Name Murry II No. 051-0244

Style Lavatory

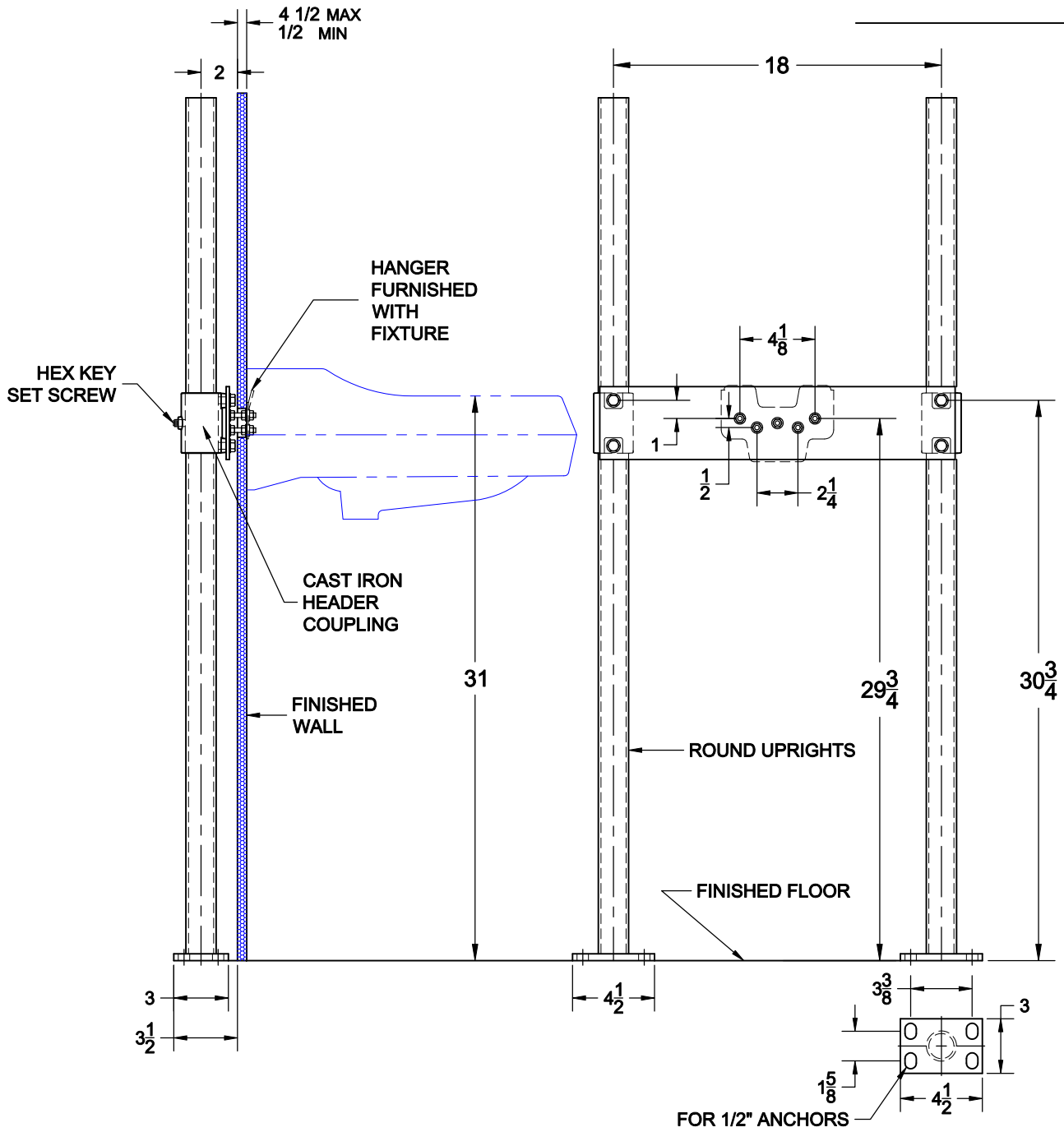

OPTIONS

Cat. No.	Type	Wt. Lbs.	Suffix	Description
☐ 420	SGL	30.0	☐ M36	SQUARE UPRIGHTS

NOTE: CONTRACTOR MUST VERIFY DIMENSIONS WITH FIXTURE MANUFACTURER ROUGH-IN DATA
TYLER PIPE / WADE DIVISION ACCEPTS NO RESPONSIBILITY FOR ANY INACCURACIES IN DRAWING

AutoCad.dwg

Approval Date

Customer Approval

Job Location

Job Name

Dimensional Data (Inches/mm) are Subject to Manufacturers Tolerance and Change Without Notice. Wade Division / Tyler Pipe Assumes No Responsibility For Superseded or Voided Data