Washfountain Carrier

623-AM11

Hanger plate carrier with pipe uprights, welded base feet, lower support plate & fixture support hardware.

FIXTURE

Manufacturer Bradley

Name Express No. SS-2/IR

Style Lavatory System SS-2/AST

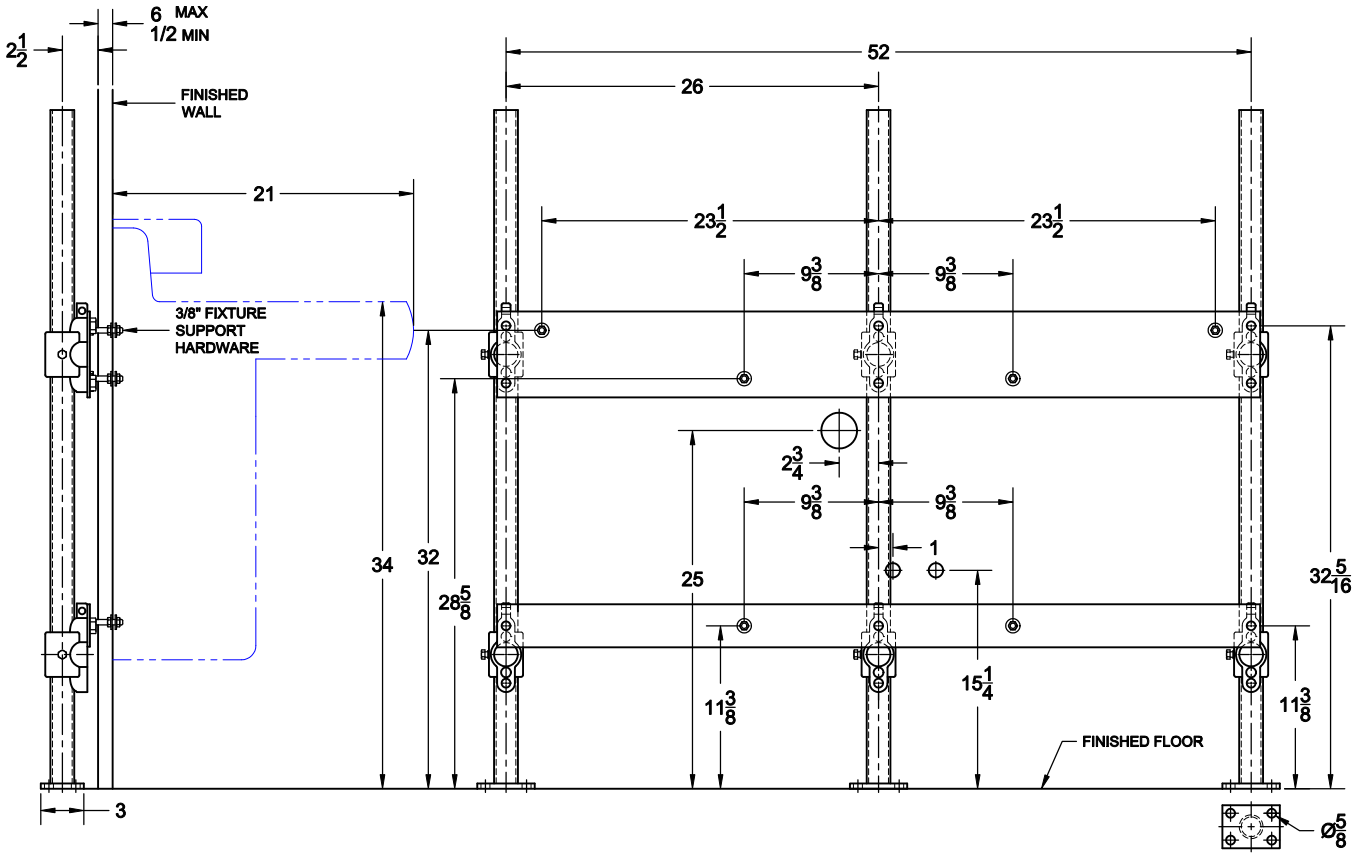

Cat. No.	Type	Wt. Lbs.
623-AM11	SINGLE	59.0

OPTIONS

Suffix	Description
M36	Rectangular Steel Uprights

AutoCad.dwg