Lavatory Carrier

520-07-M19

Concealed arm lavatory carrier with pipe uprights, welded base feet and level/lock hardware.

FIXTURE

Manufacturer KOHLER

Name Wall Hung No. 2867 W/LUGS

Style Lavatory 2868 W/LUGS

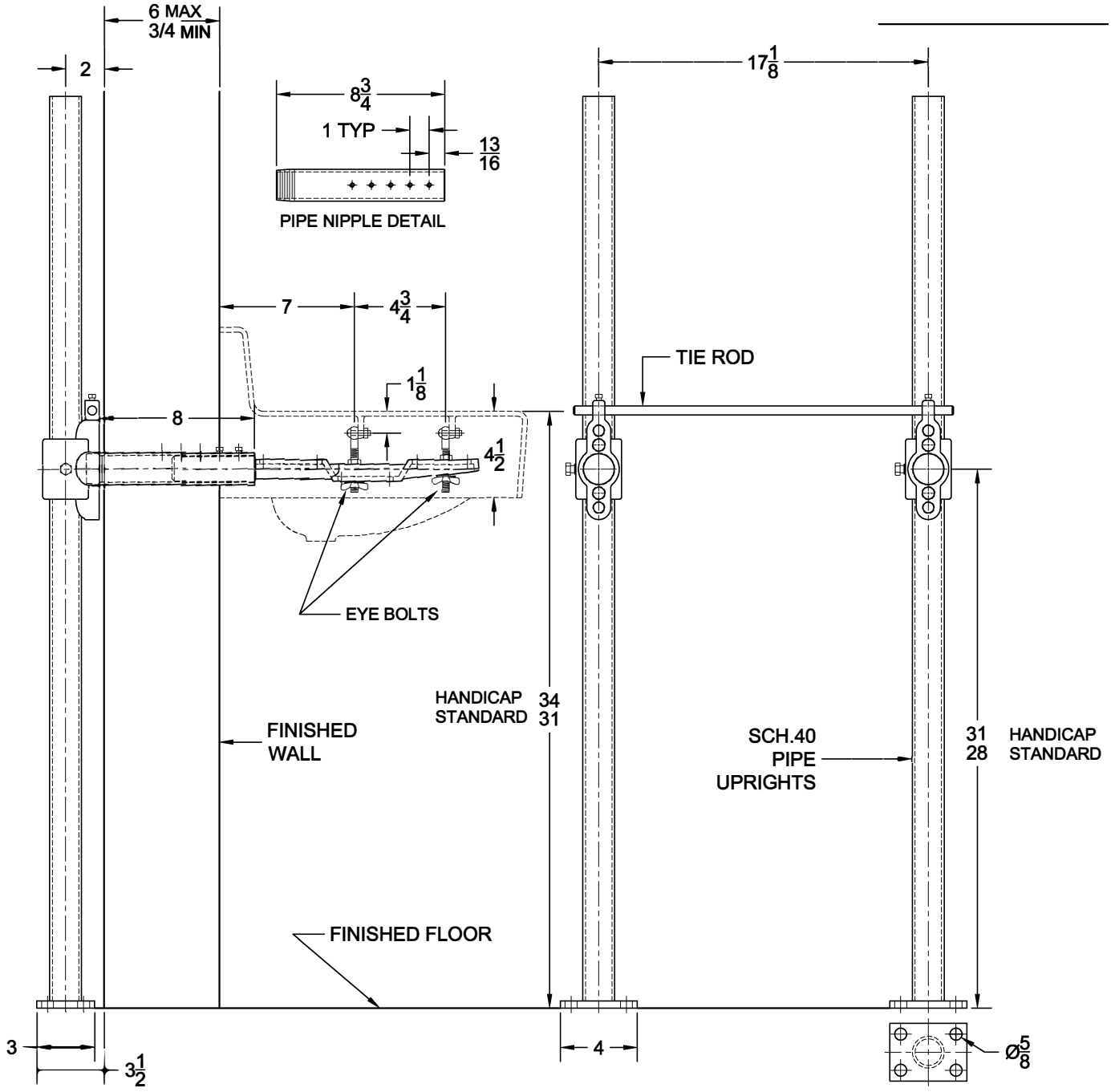

OPTIONS

Cat. No.	Type	Wt. Lbs.
☐ 520-07-M19	Single	36.0

Suffix	Description
☐ M36	Rectangular Steel Uprights
☐	

AutoCad.dwg