404 Lavatory Carrier (Support Plate Style)

Regularly Furnished: Single fixture support with painted cast iron header couplings, tubular steel uprights, 7 gauge support plate, zinc plated support hardware and welded base feet.
ASME Type III Lavatory Carrier Load Rating = 200 Lb

Villeroy & Boch 5333 U0 XX

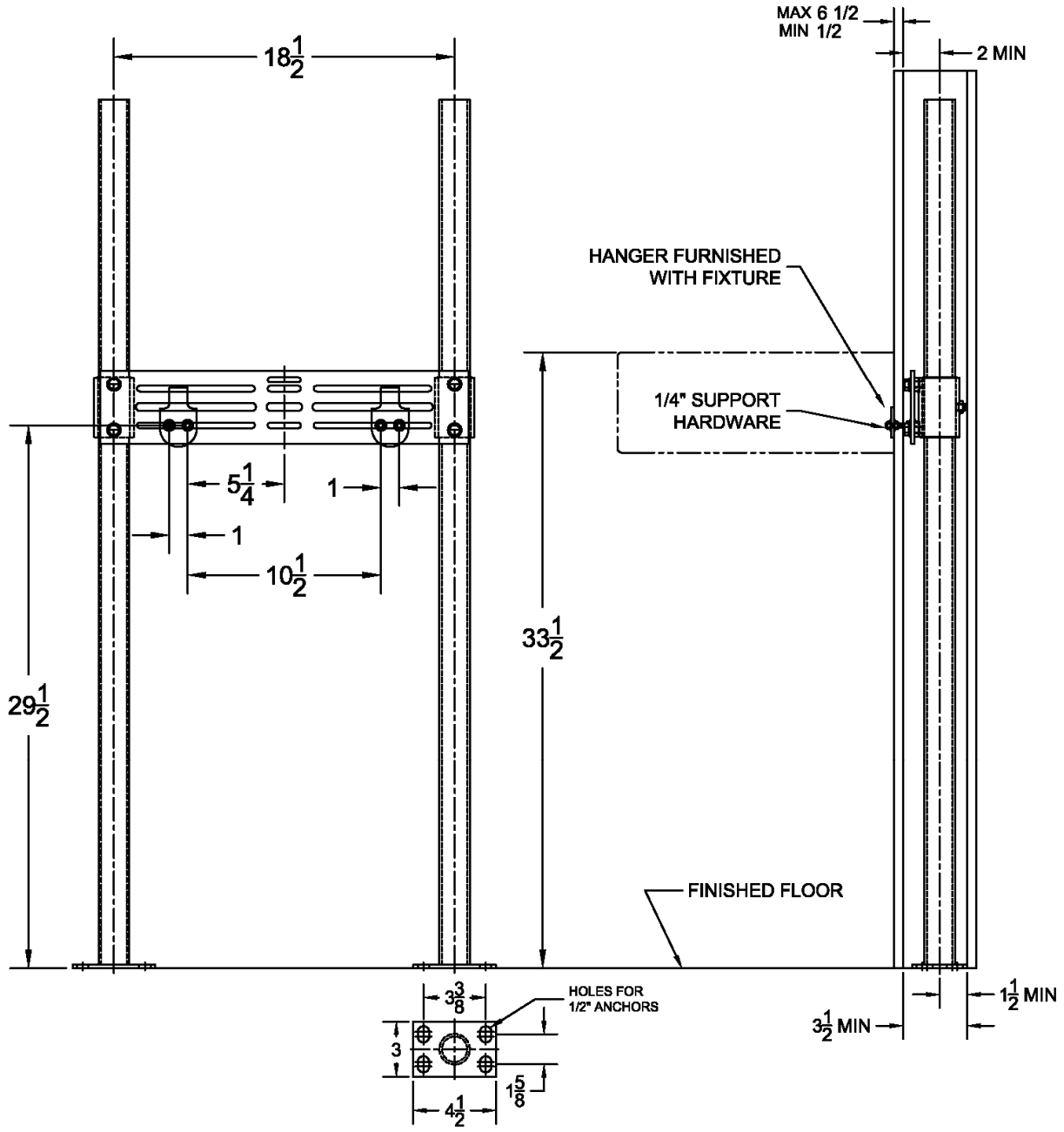

Model	UPC	Upright	Plate Package			Support Kit			Uprights		
			Qty	Part No.	UPC	Qty	Part No.	UPC	Qty	Part No.	UPC
404	449404	Round	1	WP449-U11A	401449	1	WP400-2R	544180	2	PU-1F	227434
404-M36	449407	Square	1	WP449-U11A	401449	1	WP400-2S	544081	2	PU-22-47	406419